Chicago Pneumatic

CP35 series

5" (125mm) PALM SANDERS

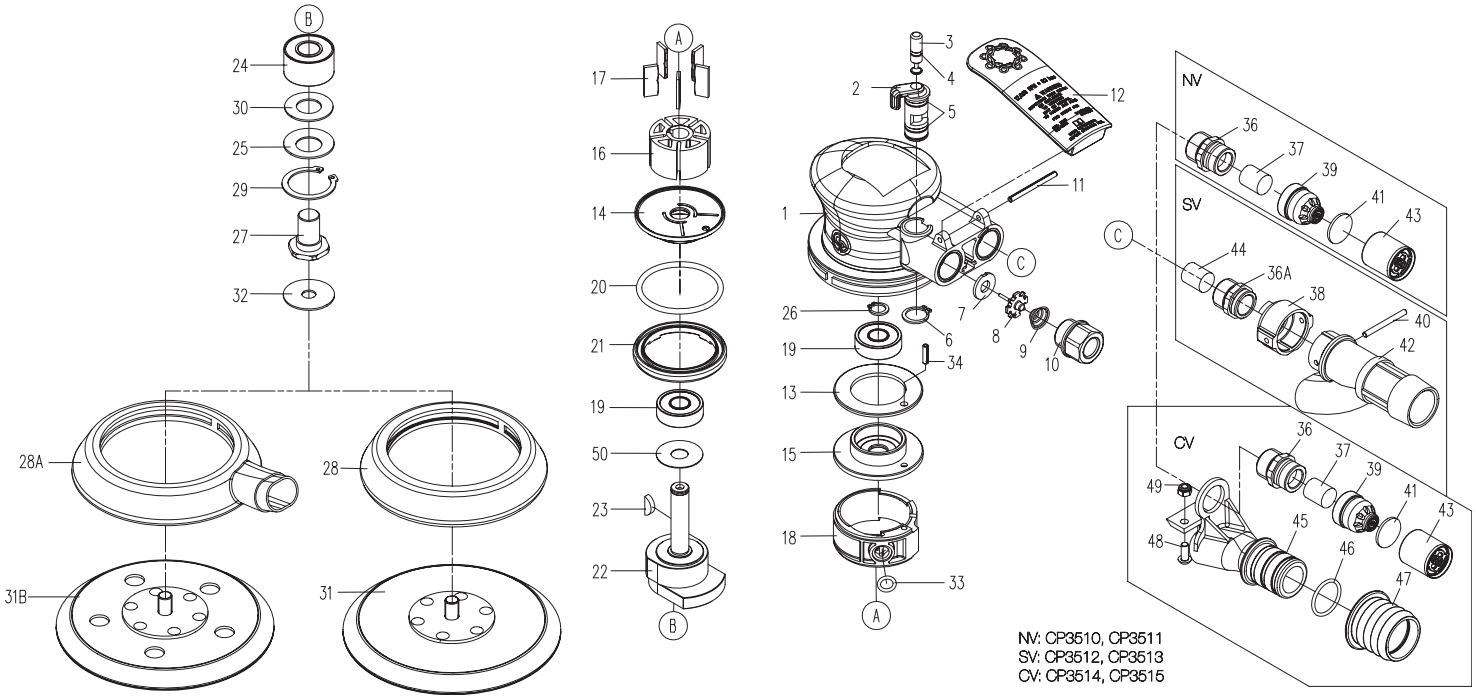

No.	Part No.	Description	Qty.
A	**8940168367**	**THROTTLE KIT**	
2		Regulator	1
3		Valve Stem	1
4		O-Ring	1
5		O-Ring	2
6		Retaining ring	1
B	**8940168368**	**VALVE SEAT KIT**	
7		Valve seat	1
8		Tip Valve	1
9		Conical Spring	1
C	**8940168369**	**EXHAUST KIT (FOR CP3510, CP3511, CP3514, CP3515)**	
36		Muffler Screw	1
37		Muffler	1
39		Nozzle	1
41		Muffler	1
43		Muffler Cap	1
D	**8940168372**	**ECO CHANGE MOTOR KIT CP35**	
13		Front Ring	1
14		Rear End Plate	1
15		Front End Plate	1
16		Rotor	1
17	8940163417	Blades set (5 pcs.)	1
18		Cylinder	1
19		Bearing	2
20	8940163420	O-Ring	1
21	8940163421	Lock ring	1
22		Motor Shaft Balancer 3/16" (5mm) orbital	1
23		Rotor Key	1
24		Bearing	1
25		Bearing Shield	1
26		Snap Ring	1
27		Balancer Shaft	1
29		Snap Ring	1
30		Bearing Seal	1
33	8940163435	O-Ring	1
34		Pin	1
50		Anti-dust washer	1

No.	Part No.	Description	Qty.
1	8940163399	Housing Assembly red color	1
10	8940163409	Air Inlet	1
11	8940163494	Spring Pin	1
12	8940163411	Lever 3/16" (5mm) orbital	1
31	8940166665	5"(125mm) Pad PSA w/o hole	1
	8940166666	5"(125mm) Pad Hook & Loop w/o hole	1
31B	8940166667	5"(125mm) Pad PSA w/ 5 holes (for SV & CV)	1
	8940166668	5"(125mm) Pad Hook & Loop w/ 5 holes (for SV & CV)	1
32		Heat Isolation Washer	1
28		Skirt	1
28A		Skirt (for SV & CV)	1
36A		Muffler Screw (for CP3512, CP3513)	1
38		Connector (for CP3512, CP3513)	1
40		Pin (for CP3512, CP3513)	1
41	8940163440	Muffler	1
42		Vacuum Adapter (for CP3512, CP3513)	1
44	8940163447	Muffler (for CP3512, CP3513)	1
45		Vacuum Adapter (for CP3514, CP3515)	1
46		O-Ring (for CP3514, CP3515)	1
47		Revolving Connector (for CP3514, CP3515)	1
48		Screw (for CP3514, CP3515)	1
49		U nut (for CP3514, CP3515)	1
	8940163525	Pad Wrench (not shown)	1
	8940163495	Dust Bag Unit (for CP3512, CP3513) (not shown)	1
	8940163497	Dust Hose (for CP3512, CP3513) (not shown)	1
	8940163220	Warning label (not shown)	1
	TUNE-UP KIT		
	8940163459	(incl. Index: 7, 17, 19, 20, 23, 26, 33, 50)	
	MAINTENANCE KIT		
	8940163460	Incl. Items below:	
	8940163525	Pad Wrench	1
	8940163579	Lock Ring wrench	1
	8940163578	Motor Extractor	1

	6159948770	SAFETY INSTRUCTIONS
	8940164564	OPERATOR'S MANUAL
	8940168614	EC DECLARATION

RECOMMENDED ACCESSORIES	
Dust extraction kit	**Vaccum hose adaptator ø25 (1") / ø28 (1-1/8")**
8940163461 (1 dust bag + dust hose for SV)	6158044480
Dust bag set	**Vaccum hose adaptator ø25 (1") / ø32 (1-1/4")**
8940163496 (5 pcs dust bag for SV)	6153501170

Spare parts without part number are not sold separately