Chicago Pneumatic

CP8828

Model **C**

Cordless 3/8” Impact Wrench 20V

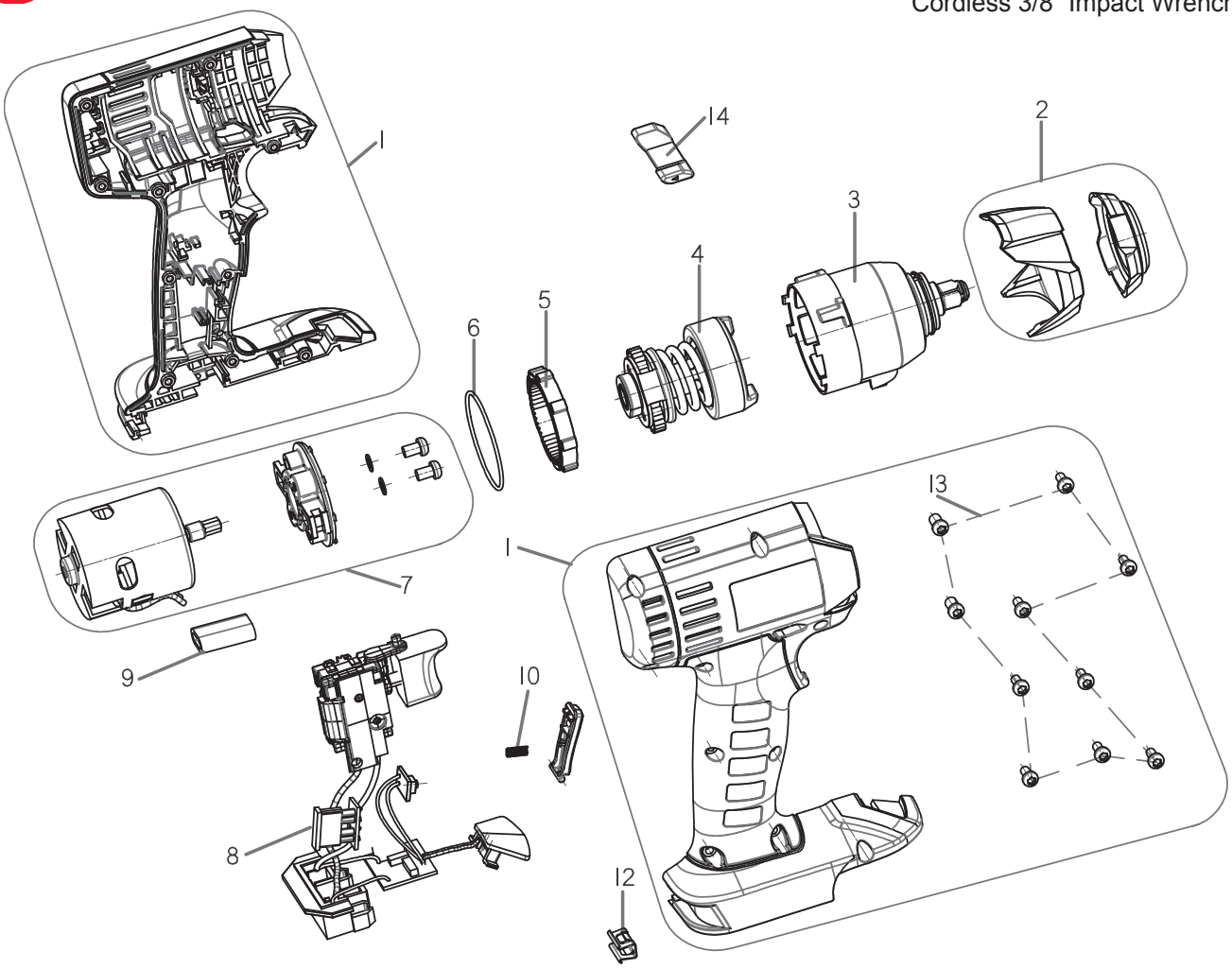

Index No.	Part No.	Description	Qty.
1	**8940172654**	**Housing Kit**	
2	**8940172658**	**Clutch Cover Kit**	
3	**8940172652**	**Grease case and Bit Holder**	
4	**8940172653**	**Gear Box**	
7	**8940172655**	**Motor Kit**	
8	**8940172651**	**Switch and LED**	
13	8940172650	ST screw M3.5x16mm (x10)	1

Index No.	Part No.	Description	Qty.
	8940172656	**Small Parts Kit**	
5		Ring Grear	1
6		Rubber Oil Seal O-ring	1
9		Ferrite Bead Elliposide Double Hole	1
10		Spring	1
11		Micro Switch Latch	1
12		Belt Clip	1
14		Side 2 Side F/R Button	1

	8940172299	Safety instruction
	8940172292	Operator's manual
	8950900061	Warning Label

Recommended Accessories

8940172669 Blow Mold Case

8940172261 20V 4Ah Battery

8940172262 Charger 20V Europe
8940172286 Charger 20V USA
8940172287 Charger 20V UK
8940172288 Charger 20V AUS

Spare parts without part number are not sold separately - High wear parts underlined

Contact us at www.cp.com

09/2014
8940182649